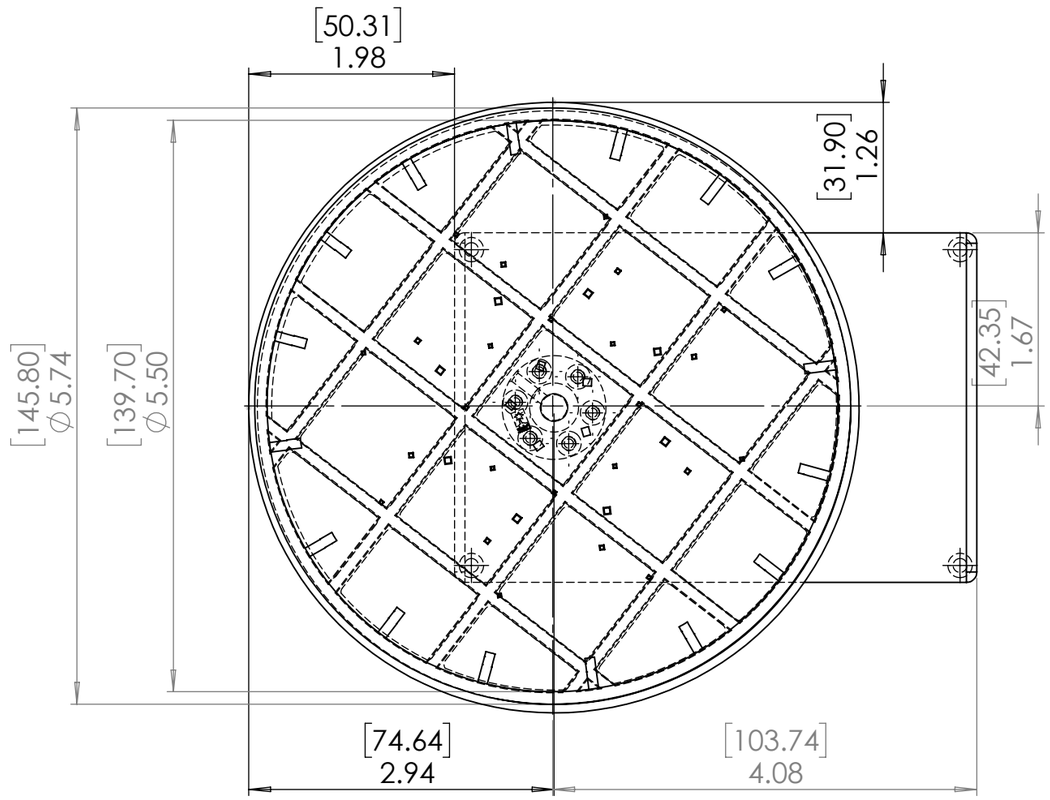

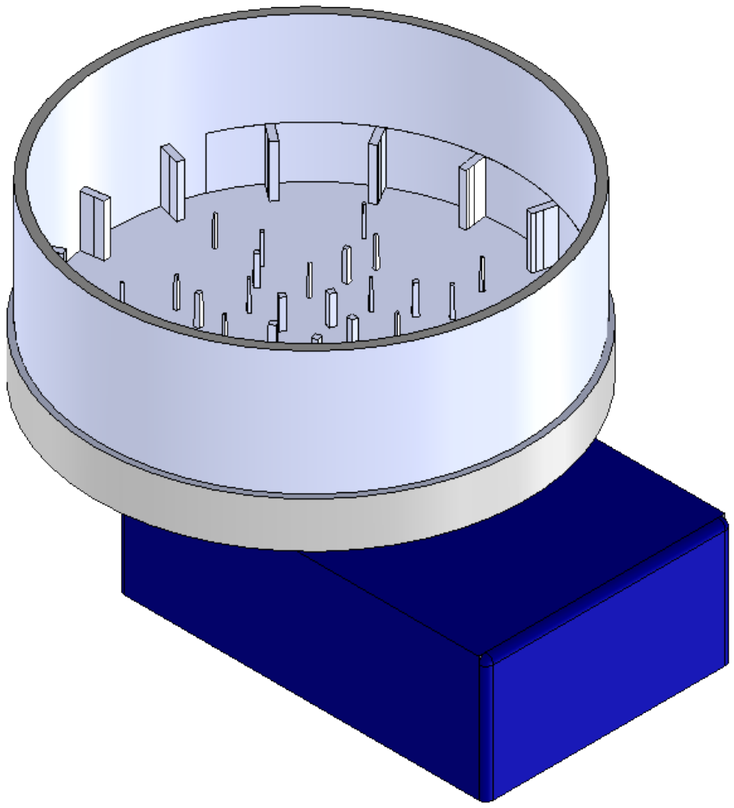

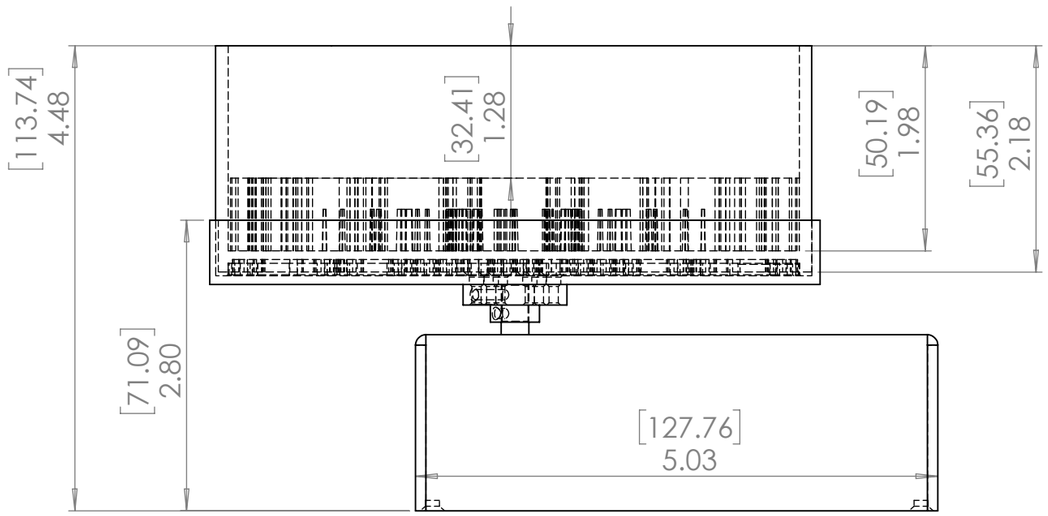

NOTE: ADD 3MM IN HEIGHT IF USED WITH RUBBER FEET

PROPRIETARY AND CONFIDENTIAL: THE INFORMATION CONTAINED IN THIS DRAWING IS THE SOLE PROPERTY OF V&P SCIENTIFIC, INC. ANY REPRODUCTION IN PART OR AS A WHOLE WITHOUT THE WRITTEN PERMISSION OF V&P SCIENTIFIC, INC. IS PROHIBITED.

DO NOT SCALE DRAWING

REVISION

V&P SCIENTIFIC, INC.

	NAME	SIGNATURE	DATE
DRAWN	AL		10/06/2020
CHK'D			
APPV'D			
MFG			
Q.A			

TITLE:

VP 418SV1-1-650FB_WEB

MATERIAL:

FINISH:

DWG NO.

740

SCALE:1:1.5

SHEET 1 OF 1